Work Order ID 84158

84158

Friday, May 04, 2012 1:18:19 PM

Item ID: D3267-043 **Accept** *N900040100* **Setup Start** *NS1*

Revision ID: **Stop** *NS2*

Item Name: Basket Lid Assembly (Inside)

Start Date: 5/4/2012 **Start Qty:** 1.00 *1* **Cust Item ID:**

Required Date: 5/14/2012 **Req'd Qty:** 1.00 *1* **Customer:**

Reference:

Run Start *NR1*

Approvals: **Process Plan:** _____ **Date:** 12-05-11 **Tooling:** _____ **Date:** _____

Stop *NR2*

QC: _____ **Date:** _____ **SPC (Y/N):** _____ **Date:** _____

Sequence ID/ Work Center ID	Operation Description	Set Up/ Run Hours	Tool ID	Tool #	Plan Code	Accept Qty	Reject Qty	Reject Number	Insp. Stamp

Draw Nbr	Revision Nbr
D3267	~~Rev C~~ D
D3836	A
D3838	A

100 Weld per dwg A/R S.S. rod Batch: 122130 0.00

100 Large Fab

Large Fab

Large Fab

1x

Memo 0.00

1-Cut Rib from 3/4" x 3/4" x 0.063" wall 304/316 SS tubing as per Dwg D3267

Pl 13.2.6

2-Cut (4) D2236-1 From D3166-3

3-Drill holes in tubing D3267-043 as per Dwg D3267

4-Deburr & Remove All Markings From Material

5-Weld D3267-043 Assembly using Welding Table and corner Jig as per Dwg D3267. Deburr as required
Note: Expanded metal "diamonds" must run lengthwise.Eg 2.0" along length of lid.

Dart Aerospace Ltd

W/O:		WORK ORDER CHANGES					
DATE	STEP	PROCEDURE CHANGE	By	Date	Qty	Approval Chief Eng / Prod Mgr	Approval QC Inspector

Part No: _____ **PAR #:** _____ **Fault Category:** _____ **NCR:** Yes No **DQA:** _____ **Date:** _____

Resolution: _____ **Disposition:** _____ **QA: N/C Closed:** _____ **Date:** _____

NCR:		WORK ORDER NON-CONFORMANCE (NCR)						
DATE	STEP	Description of NC Section A	Corrective Action Section B			Verification Section C	Approval Chief Eng	Approval QC Inspector
			Initial Chief Eng	Action Description Chief Eng	Sign & Date			

NOTE: Date & initial all entries

Work Order ID 84158

Friday, May 04, 2012 1:18:19 PM

84158

Item ID: D3267-043 **Accept** *N900040100* **Setup Start** *NS1*

Revision ID: **Stop** *NS2*

Item Name: Basket Lid Assembly (Inside)

Start Date: 5/4/2012 **Start Qty:** 1.00 *1* **Cust Item ID:**

Required Date: 5/14/2012 **Req'd Qty:** 1.00 *1* **Customer:**

Reference:

Run Start *NR1*

Stop *NR2*

Approvals: **Process Plan:** _____ **Date:** _____ **Tooling:** _____ **Date:** _____

QC: _____ **Date:** _____ **SPC (Y/N):** _____ **Date:** _____

Sequence ID/ Work Center ID	Operation Description	Set Up/ Run Hours	Tool ID	Tool #	Plan Code	Accept Qty	Reject Qty	Reject Number	Insp. Stamp
110	QC9- Inspect visual per QSI004- Fusion Welds	0.00							DAS 19 9-89 DAS 18 9-89
110 QC Quality Control	Memo	0.00							13.02.07
120	QC6- Inspect dimensions to drawing	0.00				1			DAS 15 9-89 13.3.7
120 QC Quality Control	Memo	0.00							

Dart Aerospace Ltd

W/O:		WORK ORDER CHANGES					
DATE	STEP	PROCEDURE CHANGE	By	Date	Qty	Approval Chief Eng / Prod Mgr	Approval QC Inspector

Part No: _____ **PAR #:** _____ **Fault Category:** _____ **NCR:** Yes No **DQA:** _____ **Date:** _____

Resolution: _____ **Disposition:** _____ **QA: N/C Closed:** _____ **Date:** _____

NCR:		WORK ORDER NON-CONFORMANCE (NCR)						
DATE	STEP	Description of NC Section A	Corrective Action Section B			Verification Section C	Approval Chief Eng	Approval QC Inspector
			Initial Chief Eng	Action Description Chief Eng	Sign & Date			

NOTE: Date & initial all entries

H:\fFORMS\Quality Assurance\approved QA\NCRWO RevE

Work Order ID 84158

84158

Friday, May 04, 2012 1:18:19 PM

Item ID: D3267-043 **Accept** *N900040100* **Setup Start** *NS1*

Revision ID: **Stop** *NS2*

Item Name: Basket Lid Assembly (Inside)

Start Date: 5/4/2012 **Start Qty:** 1.00 *1* **Cust Item ID:**

Required Date: 5/14/2012 **Req'd Qty:** 1.00 *1* **Customer:**

Reference:

Run Start *NR1*

Stop *NR2*

Approvals: **Process Plan:** _____ **Date:** _____ **Tooling:** _____ **Date:** _____

QC: _____ **Date:** _____ **SPC (Y/N):** _____ **Date:** _____

Sequence ID/ Work Center ID	Operation Description	Set Up/ Run Hours	Tool ID	Tool #	Plan Code	Accept Qty	Reject Qty	Reject Number	Insp. Stamp
130	White Gloss(Ref:4.3.5.1) per QSI005 4.3-Alum M123383	0.00				1	∅		13-2-7
130 Powdercoat	**Memo**	0.00							
Powder Coating	Powder Coat White Gloss (Ref: 4.3.5.1) as per QSI 005 4.3 1ST START TIME: 10:10 OVEN TEMPERATURE: 400° FINISH TIME: 10:40 ********** 2nd coat if necessary ********** 2ND COAT: START TIME: _____ OVEN TEMPERATURE: _____ FINISH TIME: _____								
140	QC3- Inspect Part Finish	0.00				1 x	∅		13/02/07
140 QC	**Memo**	0.00							
Quality Control									

Dart Aerospace Ltd

W/O:		WORK ORDER CHANGES					
DATE	STEP	PROCEDURE CHANGE	By	Date	Qty	Approval Chief Eng / Prod Mgr	Approval QC Inspector

Part No: _____ **PAR #:** _____ **Fault Category:** _____ **NCR:** Yes No **DQA:** _____ **Date:** _____

Resolution: _____ **Disposition:** _____ **QA: N/C Closed:** _____ **Date:** _____

NCR:		WORK ORDER NON-CONFORMANCE (NCR)						
DATE	STEP	Description of NC Section A	Corrective Action Section B			Verification Section C	Approval Chief Eng	Approval QC Inspector
			Initial Chief Eng	Action Description Chief Eng	Sign & Date			

NOTE: Date & initial all entries

H:\fFORMS\Quality Assurance\approved QA\NCRWO RevE

Work Order ID 84158

Friday, May 04, 2012 1:18:19 PM

84158

Item ID: D3267-043 **Accept** *N900040100* **Setup Start** *NS1*

Revision ID: **Stop** *NS2*

Item Name: Basket Lid Assembly (Inside)

Start Date: 5/4/2012 **Start Qty:** 1.00 *1* **Cust Item ID:**

Required Date: 5/14/2012 **Req'd Qty:** 1.00 *1* **Customer:**

Reference:

Run Start *NR1*

Stop *NR2*

Approvals: **Process Plan:** _____ **Date:** _____ **Tooling:** _____ **Date:** _____

QC: _____ **Date:** _____ **SPC (Y/N):** _____ **Date:** _____

Sequence ID/ Work Center ID	Operation Description	Set Up/ Run Hours	Tool ID	Tool #	Plan Code	Accept Qty	Reject Qty	Reject Number	Insp. Stamp
145	Identify as per dwg & Stock Location: w/o	0.00	0350-607-047	B84155		1x	0		13/02/07
145 Packaging	Memo	0.00							
Packaging									
150	QC21- Final Inspection - Work Order Release	0.00						13/2/11	
150 QC	Memo	0.00							
Quality Control									

MF
13-2-07

Dart Aerospace Ltd

W/O:		WORK ORDER CHANGES					
DATE	STEP	PROCEDURE CHANGE	By	Date	Qty	Approval Chief Eng / Prod Mgr	Approval QC Inspector

Part No: _____ **PAR #:** _____ **Fault Category:** _____ **NCR:** Yes No **DQA:** _____ **Date:** _____

Resolution: _____ **Disposition:** _____ **QA: N/C Closed:** _____ **Date:** _____

NCR:		WORK ORDER NON-CONFORMANCE (NCR)						
DATE	STEP	Description of NC Section A	Corrective Action Section B			Verification Section C	Approval Chief Eng	Approval QC Inspector
			Initial Chief Eng	Action Description Chief Eng	Sign & Date			

NOTE: Date & initial all entries

H:\fFORMS\Quality Assurance\approved QA\NCRWO RevE

Picklist Print

Friday, May 04, 2012 1:18:23 PM

Work Order ID: 84158 *84158*

Parent Item: D3267-043 *D3267-043*

Parent Item Name: Basket Lid Assembly (Inside)

Start Date: 5/4/2012 **Required Date:** 5/14/2012

Start Qty: 1.00 **Required Qty:** 1.00

Comments: IPP Rev:C Removed -041 05-11-04 JLM
IPP Rev:D 08-09-10 revC as per dwg (ecn 08-524) DD verified by:EC
IPP Rev:E add I.D. DD 10.03.11 verified by:EC IPP Rev:F
reverse order of seq. 150, 155 DD 10.04.07 Verified by:JLM

Component Item ID/ Item Name	Replacement Item ID	Mfg/ Purch	Bin Item	Primary Location	Last Location	Route Seq ID	Unit of Measure	Qty on Hand	Qty per Kit	Total Qty	Qty Issued	Date Issued	Status
D3166-3 *D3166-3* Basket Hoop	N/A	Manufactured	No			100	Each	6.0000	0 **	0			
				Location		**Loc Qty**		**Loc Code**					
				WA		5							
					81578	5							
				WA007		1							
					77294	1							
D3182-1 *D3182-1* Hinge		Manufactured	No			100	Each	16.0000	2 **	2			
				Location		**Loc Qty**		**Loc Code**					
				WA		16							
					77316	8							
					82707	8							
D3442-3 *D3442-3* Shim		Manufactured	No			100	Each	18.0000	2 **	2			
				Location		**Loc Qty**		**Loc Code**					
				WA		18							
					79123	6							
					82708	12							

Cpl 13.2.6
B90725 → 2

Cpl 13.2.6
B79123 → 2

Dart Aerospace Ltd

W/O:		WORK ORDER CHANGES					
DATE	STEP	PROCEDURE CHANGE	By	Date	Qty	Approval Chief Eng / Prod Mgr	Approval QC Inspector

Part No: _____ **PAR #:** _____ **Fault Category:** _____ **NCR:** Yes No **DQA:** _____ **Date:** _____

Resolution: _____ **Disposition:** _____ **QA: N/C Closed:** _____ **Date:** _____

NCR:		WORK ORDER NON-CONFORMANCE (NCR)						
DATE	STEP	Description of NC Section A	Corrective Action Section B			Verification Section C	Approval Chief Eng	Approval QC Inspector
			Initial Chief Eng	Action Description Chief Eng	Sign & Date			

NOTE: Date & initial all entries

H:\fFORMS\Quality Assurance\approved QA\NCRWO RevE

Picklist Print

Friday, May 04, 2012 1:18:23 PM

Work Order ID: 84158

84158

Parent Item: D3267-043

D3267-043

Parent Item Name: Basket Lid Assembly (Inside)

Start Date: 5/4/2012 **Required Date:** 5/14/2012

Start Qty: 1.00 **Required Qty:** 1.00

M304TS0.750W.065	Purchased	No	100	f	1,013.792	7	7.368421

M304TS0.750W.065

304 SQ Tube .75x.75x.065W

**

N/A

Location		Loc Qty	Loc Code	
MAT017		553.7325342		
	120267	53.7325342		
	120633	500		
MAT018		453.40289		
	121170	412.40289		
	7636	41		
WA007		0.5907428		
	116763	0.5907428		
WA035		6.0667		
	118181	6.0667		

D2989-3 → B88271 → 1
D2989-4 → B86664 → 1
D2989-5 → B90841 → 1
D3265-043 → B89442 → 1
D3265-1 → B88994 → 1
D3832-9 → B88366 → 1
D3833-5 → B67461 → 2
D3838-041 → B89333 → 1
D3838-042 → B84798 → 1

Cpl 13.2.6

Dart Aerospace Ltd

W/O:		WORK ORDER CHANGES					
DATE	STEP	PROCEDURE CHANGE	By	Date	Qty	Approval Chief Eng / Prod Mgr	Approval QC Inspector

Part No: _____ **PAR #:** _____ **Fault Category:** _____ **NCR:** Yes No **DQA:** _____ **Date:** _____

Resolution: _____ **Disposition:** _____ **QA: N/C Closed:** _____ **Date:** _____

NCR:		WORK ORDER NON-CONFORMANCE (NCR)						
DATE	STEP	Description of NC Section A	Corrective Action Section B			Verification Section C	Approval Chief Eng	Approval QC Inspector
			Initial Chief Eng	Action Description Chief Eng	Sign & Date			

NOTE: Date & initial all entries

H:\fFORMS\Quality Assurance\approved QA\NCRWO RevE

Picklist Print

Friday, May 04, 2012 1:18:23 PM

Work Order ID: 84158

84158

Parent Item: D3267-043

D3267-043

Parent Item Name: Basket Lid Assembly (Inside)

Start Date: 5/4/2012 **Required Date:** 5/14/2012

Start Qty: 1.00 **Required Qty:** 1.00

M304EX0.75-16F	Purchased	No	110	sf	878.1439	4.3	4.526316	

M304EX0.75-16F

Expanded Metal Flat SS

N/A

Location		Loc Qty	Loc Code	
MAT		80.8585		
	121347	80.8585		
WA		221.0001156		
	119180	0.0001156		
	121471	221		
WA035		576.2852641		
	117197	102.9036		
	117896	29.49258		
	118153	76.8473		
	118955	82.17		
	119180	53.6958107		
	119729	28.1132686		
	120153	2.97557478		
	120917	120.52013		
	121082	14.14		
	121521	65.427		

Dart Aerospace Ltd

W/O:		WORK ORDER CHANGES					
DATE	STEP	PROCEDURE CHANGE	By	Date	Qty	Approval Chief Eng / Prod Mgr	Approval QC Inspector

Part No: _____ **PAR #:** _____ **Fault Category:** _____ **NCR:** Yes No **DQA:** _____ **Date:** _____

Resolution: _____ **Disposition:** _____ **QA: N/C Closed:** _____ **Date:** _____

NCR:		WORK ORDER NON-CONFORMANCE (NCR)						
DATE	STEP	Description of NC Section A	Corrective Action Section B			Verification Section C	Approval Chief Eng	Approval QC Inspector
			Initial Chief Eng	Action Description Chief Eng	Sign & Date			

NOTE: Date & initial all entries

H:\fFORMS\Quality Assurance\approved QA\NCRWO RevE

QTY -041	QTY -043	PART NUMBER	DESCRIPTION
X		D3267-041	BASKET LID ASSEMBLY (OUTSIDE)
	X	D3267-043	BASKET LID ASSEMBLY (INSIDE)
1		D2506	LABEL PLATE
1		D2512-7	STRUT
2		D2581	MOUNTING BRACKET
	1	D2989-3	STRUT
	1	D2989-4	STRUT
	2	D2989-5	STRUT
2		D2989-13	STRUT
	2	D3182-1	HINGE
	1	D3265-043	RIB ASSY
2	1	D3265-1	STRUT
2		D3267-1	STRUT
	2	D3442-3	SHIM
1		D3832-7	MESH (LID)
	1	D3832-9	MESH (LID)
2		D3833-3	MESH, LID END
	2	D3833-5	MESH, LID END
1		D3836-041	RIB ASSY (BASKET LID, LH)
1		D3836-042	RIB ASSY (BASKET LID, RH)
	1	D3838-041	RIB ASSY (BASKET LID, LH)
	1	D3838-042	RIB ASSY (BASKET LID, RH)
1		D3852-041	RIB ASSEMBLY
1		D3852-042	RIB ASSEMBLY

ab 84158

RELEASED
2012 -07- 16

REV.	DESCRIPTION	BY	DATE
D	GENERAL UPDATE TO SATISFY PAR10-50.	MB	12.05.17
C	DRAWING UPDATED TO CURRENT STANDARDS. SHEET 3 ADDED. FRAME MATERIAL WALL THICKNESS WAS 0.060. D3267-1 DETAILED.	AJS	08.08.15
B	ADD SHIM UNDER HINGES	PH	05.06.08
A	NEW ISSUE	DS	04.02.02

DESIGN	DS	**DART AEROSPACE LTD** HAWKESBURY, ONTARIO, CANADA
DRAWN		
CHECKED		DRAWING NO. D3267 — REV. D — SHEET 1 OF 3
MFG. APPR.		
APPROVED		TITLE: BASKET LID ASSEMBLY — SCALE: NTS
DE APPR.		
DATE	12.05.17	

COPYRIGHT © 2004 BY DART AEROSPACE LTD
THIS DOCUMENT IS PRIVATE AND CONFIDENTIAL AND IS SUPPLIED ON THE EXPRESS CONDITION THAT IT IS NOT TO BE USED FOR ANY PURPOSE OR COPIED OR COMMUNICATED TO ANY OTHER PERSON WITHOUT WRITTEN PERMISSION FROM DART AEROSPACE LTD

DQA: _____ Date: _____

NCR: Yes / No

WORK ORDER NON-CONFORMANCE / UPDATE

QA Closed: Date:

Work Order: _____

Part No. _____

NCR No. _____

DISPOSITION

- Rework ☐
- Scrap ☐
- Use-as-is ☐
- Work Order Update ☐

AGAINST DEPARTMENT/PROCESS

- Skid-tube ☐
- Machining ☐
- Thermoforming ☐
- Large Fab ☐
- Crosstube ☐
- Small Fab ☐
- Finishing ☐
- Composite ☐
- Water Jet ☐
- Prod. Eng. Coor. ☐
- Rec/Store/Packaging ☐
- Supplier ☐
- Engineering ☐
- Quality ☐
- Other ☐

Root Cause		Date	Step	Qty	Description of work order update or Non-conformance	Initial Chief Eng	Action Description	Sign & Date	Verification	QC Inspector
Doc/Data	☐									
Equip/Tooling	☐									
Operator	☐									
Material	☐									
Setup	☐									
Other	☐									
Process	☐									
Supplier	☐									
Training	☐									
Unapproved	☐									

FAULT CATEGORY

Landing Gear

- ☐ Bending
- ☐ Centre Not Concentric to O/S
- ☐ Cracks
- ☐ Crushed/Crimped.
- ☐ Cuffs
- ☐ Heat Treat
- ☐ Inspection Strip in Tube
- ☐ Ripples in Bend
- ☐ Torque Waves in Extrusion
- ☐ Turning Sequence
- ☐ Wave/Twist in Tube

General

- ☐ Bend
- ☐ BOM/Route
- ☐ Broken/Damaged
- ☐ Burrs
- ☐ Contamination
- ☐ Countersink
- ☐ Cut Too Short
- ☐ Drill Holes
- ☐ Drawing
- ☐ Finish
- ☐ Folio
- ☐ Grain
- ☐ Hardware
- ☐ Inspection Incomplete
- ☐ Instructions Incomplete/Unclear
- ☐ Maintenance
- ☐ Mislabelec
- ☐ Misread
- ☐ Offset
- ☐ Out of Calibration
- ☐ Out of Sequence
- ☐ Outside Dimensions
- ☐ Ovalized
- ☐ Over/Under tolerance
- ☐ Part Incorrect
- ☐ Part Lost/Missing
- ☐ Part Moved
- ☐ Positioned Wrong
- ☐ Power Loss/Surge
- ☐ Pressure/Forced
- ☐ Temperature/Cure
- ☐ Weld
- ☐ Wrong Stock Pulled
- ☐ Other _____

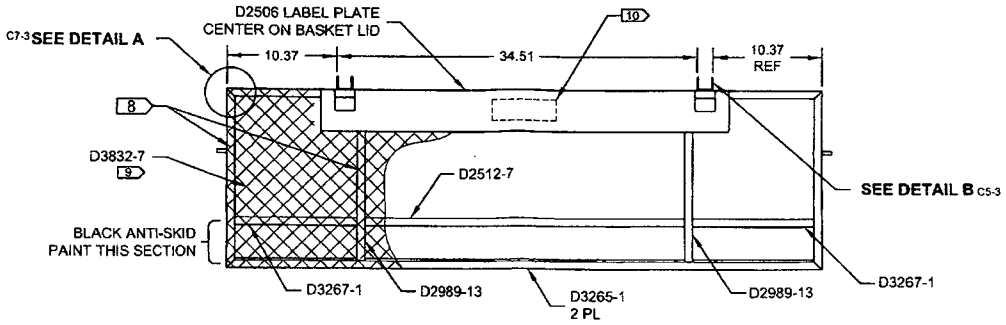

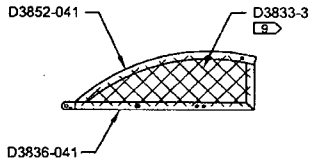

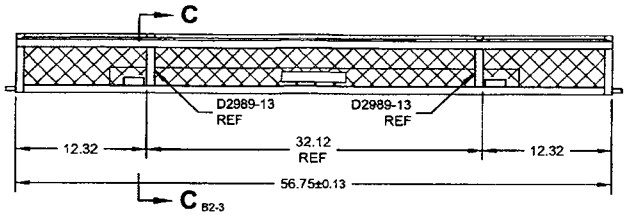

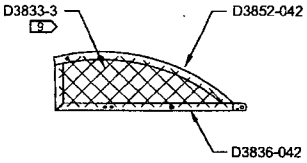

D3267-041 LID ASSEMBLY

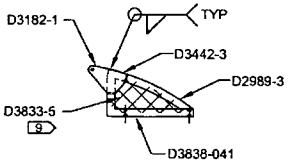

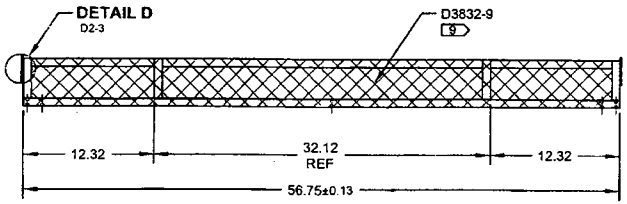

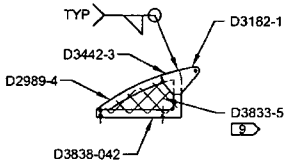

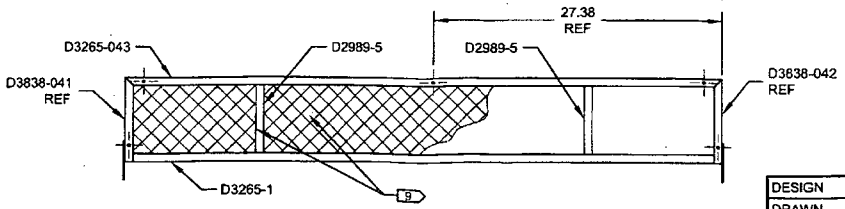

D3267-043 LID ASSEMBLY

RELEASED
2012 -07- 16

NOTES:
1) MATERIAL: N/A
2) FINISH: POWDER COAT ENTIRE ASSEMBLY WHITE (REF. 4.3.5.2) PER DART QSI 005 4.3. BLACK ANTI-SKID PAINT INDICATED AREA PER DART QSI 005 4.4. SPRAY PAINT INSIDE SURFACES BLACK PRIOR TO APPLYING ANTI-SKID.
3) TOLERANCES: PER DART QSI 018 UNLESS OTHERWISE NOTED
4) UNITS: INCHES UNLESS OTHERWISE NOTED
5) BREAK SHARP EDGES: 0.005 TO 0.010 MAX
6) IDENTIFICATION: N/A
7) WEIGHT: N/A
8) WELDING: PER DART QSI 004
9) TACK WELD D3832-7/-9 AND D3833-3/-5 MESH TO FRAME AT EVERY AVAILABLE LOCATION
10) REMOVE 2" x 6" SECTION OF MESH FROM BEHIND LABEL PLATE

DESIGN	DS	**DART AEROSPACE LTD** HAWKESBURY, ONTARIO, CANADA
DRAWN		
CHECKED		DRAWING NO. D3267 — REV. D — 2 OF 3
MFG. APPR.		
APPROVED		TITLE: BASKET LID ASSEMBLY — SCALE: NTS
DE APPR.		
DATE	12.05.17	

COPYRIGHT © 2004 BY DART AEROSPACE LTD
THIS DOCUMENT IS PRIVATE AND CONFIDENTIAL AND IS SUPPLIED ON THE EXPRESS CONDITION THAT IT IS NOT TO BE USED FOR ANY PURPOSE OR COPIED OR COMMUNICATED TO ANY OTHER PERSON WITHOUT WRITTEN PERMISSION FROM DART AEROSPACE LTD.

DQA: _____ Date: _____

NCR: Yes / No

WORK ORDER NON-CONFORMANCE / UPDATE

QA Closed: Date:

Work Order: _____

Part No. _____

NCR No. _____

DISPOSITION

- Rework ☐
- Scrap ☐
- Use-as-is ☐
- Work Order Update ☐

AGAINST DEPARTMENT/PROCESS

Skid-tube ☐	Crosstube ☐	Water Jet ☐	Engineering ☐
Machining ☐	Small Fab ☐	Prod. Eng. Coor. ☐	Quality ☐
Thermoforming ☐	Finishing ☐	Rec/Store/Packaging ☐	Other ☐
Large Fab ☐	Composite ☐	Supplier ☐	☐

Root Cause		Date	Step	Qty	Description of work order update or Non-conformance	Initial Chief Eng	Action Description	Sign & Date	Verification	QC Inspector
Doc/Data	☐									
Equip/Tooling	☐									
Operator	☐									
Material	☐									
Setup	☐									
Other	☐									
Process	☐									
Supplier	☐									
Training	☐									
Unapproved	☐									

FAULT CATEGORY

Landing Gear

- ☐ Bending
- ☐ Centre Not Concentric to O/S
- ☐ Cracks
- ☐ Crushed/Crimped.
- ☐ Cuffs
- ☐ Heat Treat
- ☐ Inspection Strip in Tube
- ☐ Ripples in Bend
- ☐ Torque Waves in Extrusion
- ☐ Turning Sequence
- ☐ Wave/Twist in Tube

General

- ☐ Bend
- ☐ BOM/Route
- ☐ Broken/Damaged
- ☐ Burrs
- ☐ Contamination
- ☐ Countersink
- ☐ Cut Too Short
- ☐ Drill Holes
- ☐ Drawing
- ☐ Finish
- ☐ Folio
- ☐ Grain
- ☐ Hardware
- ☐ Inspection Incomplete
- ☐ Instructions Incomplete/Unclear
- ☐ Maintenance
- ☐ Mislabeled
- ☐ Misread
- ☐ Offset
- ☐ Out of Calibration
- ☐ Out of Sequence
- ☐ Outside Dimensions
- ☐ Ovalized
- ☐ Over/Under tolerance
- ☐ Part Incorrect
- ☐ Part Lost/Missing
- ☐ Part Moved
- ☐ Positioned Wrong
- ☐ Power Loss/Surge
- ☐ Pressure/Forced
- ☐ Temperature/Cure
- ☐ Weld
- ☐ Wrong Stock Pulled
- ☐ Other _____

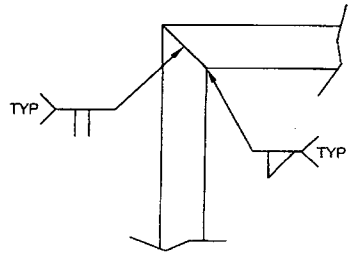

DETAIL A D7-2
JOINT WELD DETAIL TYP
(MESH NOT SHOWN FOR CLARITY)
SCALE 2X

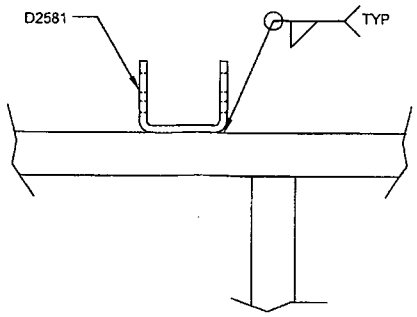

DETAIL B D2-2
2 PL
SCALE 2X

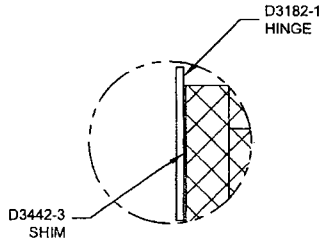

DETAIL D B6-2
SCALE 2X
2 PL

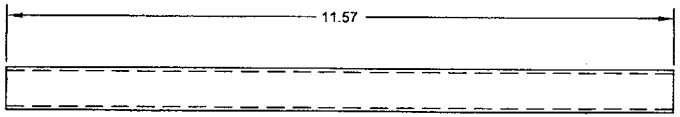

D3267-1 STRUT 1

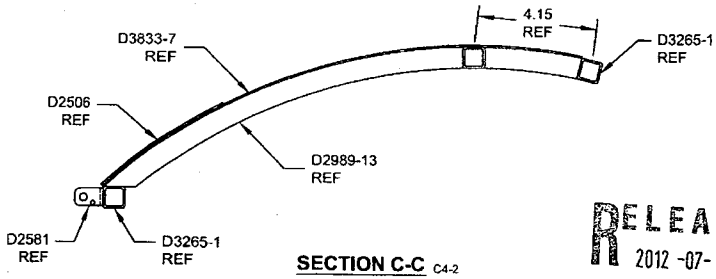

SECTION C-C C4-2

RELEASED
2012 -07- 16

NOTES:
1) MATERIAL: AISI 304/316 SEAMLESS STAINLESS STEEL SQUARE TUBING
PER ASTM A554/A269 MILL FINISH, 0.75 X 0.75 X 0.065 WALL
REF. DART SPEC M304TS0.750W.065
2) FINISH: NONE
3) TOLERANCES: PER DART QSI 018 UNLESS OTHERWISE NOTED
4) UNITS: INCHES UNLESS OTHERWISE NOTED
5) BREAK SHARP EDGES: 0.005 TO 0.010 MAX
6) IDENTIFICATION: N/A
7) WEIGHT: N/A

DESIGN	DS	**DART AEROSPACE LTD** HAWKESBURY, ONTARIO, CANADA	
DRAWN		DRAWING NO.	REV. D
CHECKED		D3267	3 OF 3
MFG. APPR.		TITLE	SCALE
APPROVED		BASKET LID ASSMEBLY	NTS
DE APPR.			
DATE	12.05.17		

COPYRIGHT © 2004 BY DART AEROSPACE LTD
THIS DOCUMENT IS PRIVATE AND CONFIDENTIAL AND IS SUPPLIED ON THE EXPRESS CONDITION THAT IT IS NOT TO BE USED FOR ANY PURPOSE OR COPIED OR COMMUNICATED TO ANY OTHER PERSON WITHOUT WRITTEN PERMISSION FROM DART AEROSPACE LTD.

DQA: _____ Date: _____

NCR: Yes / No

WORK ORDER NON-CONFORMANCE / UPDATE

QA Closed: Date:

Work Order: _____

Part No. _____

NCR No. _____

DISPOSITION

- Rework ☐
- Scrap ☐
- Use-as-is ☐
- Work Order Update ☐

AGAINST DEPARTMENT/PROCESS

- Skid-tube ☐
- Machining ☐
- Thermoforming ☐
- Large Fab ☐
- Crosstube ☐
- Small Fab ☐
- Finishing ☐
- Composite ☐
- Water Jet ☐
- Prod. Eng. Coor. ☐
- Rec/Store/Packaging ☐
- Supplier ☐
- Engineering ☐
- Quality ☐
- Other ☐

Root Cause		Date	Step	Qty	Description of work order update or Non-conformance	Initial Chief Eng	Action Description	Sign & Date	Verification	QC Inspector
Doc/Data	☐									
Equip/Tooling	☐									
Operator	☐									
Material	☐									
Setup	☐									
Other	☐									
Process	☐									
Supplier	☐									
Training	☐									
Unapproved	☐									

FAULT CATEGORY

Landing Gear

- ☐ Bending
- ☐ Centre Not Concentric to O/S
- ☐ Cracks
- ☐ Crushed/Crimped.
- ☐ Cuffs
- ☐ Heat Treat
- ☐ Inspection Strip in Tube
- ☐ Ripples in Bend
- ☐ Torque Waves in Extrusion
- ☐ Turning Sequence
- ☐ Wave/Twist in Tube

General

- ☐ Bend
- ☐ BOM/Route
- ☐ Broken/Damaged
- ☐ Burrs
- ☐ Contamination
- ☐ Countersink
- ☐ Cut Too Short
- ☐ Drill Holes
- ☐ Drawing
- ☐ Finish
- ☐ Folio
- ☐ Grain
- ☐ Hardware
- ☐ Inspection Incomplete
- ☐ Instructions Incomplete/Unclear
- ☐ Maintenance
- ☐ Mislabeled
- ☐ Misread
- ☐ Offset
- ☐ Out of Calibration
- ☐ Out of Sequence
- ☐ Outside Dimensions
- ☐ Ovalized
- ☐ Over/Under tolerance
- ☐ Part Incorrect
- ☐ Part Lost/Missing
- ☐ Part Moved
- ☐ Positioned Wrong
- ☐ Power Loss/Surge
- ☐ Pressure/Forced
- ☐ Temperature/Cure
- ☐ Weld
- ☐ Wrong Stock Pulled
- ☐ Other

_____

_____

_____